Centrifugal fan FEM
400 series

(2) 06/2018

standard handed RD 0° (other handings available) • protection degree IP 55 • efficiency class IE3

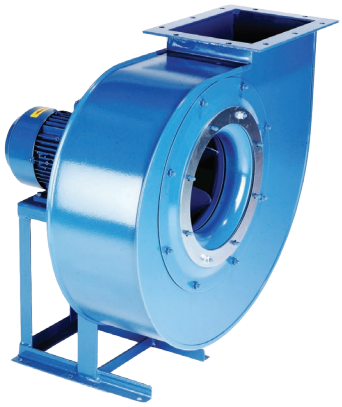

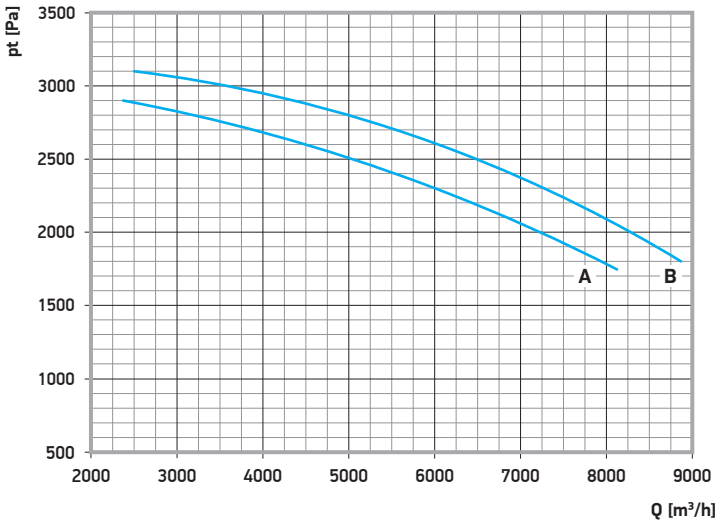

3 x 400 V
50 Hz

A - FEM 400 / 402 B - FEM 450

Catalogue number	Type	Air flow	Compression	Fan speed	Motor power	Current	Operating temp.	Weight
59-850-400	**FEM 400**	2100 - 8100 m³/h	2900 - 1750 Pa	2900 rpm	5,5 kW	10,0 A	standard	138,0 kg
59-850-402	**FEM 402**	2100 - 8100 m³/h	2900 - 1750 Pa	2900 rpm	5,5 kW	10,0 A	+250°C	138,0 kg
59-850-450	**FEM 450**	2200 - 8900 m³/h	3100 - 1800 Pa	2900 rpm	7,5 kW	13,6 A	standard	146,0 kg
S11016-100	**FEM 451**	4000 - 10000 m³/h	2800 - 2200 Pa	2900 rpm	7,5 kW	13,6 A	standard	123,0 kg
59-850-452	**FEM 452**	2200 - 8900 m³/h	3100 - 1800 Pa	2900 rpm	7,5 kW	13,6 A	+250°C	146,0 kg

Sound pressure level measured at a distance of 1 m, according to DIN 45635, 45633.

			63	125	250	500	1000	2000	4000	8000	Hz
59-850-40x	**FEM 40x**	**cover**	53	57	63	63	64	63	59	55	**dB**
		inlet	64	68	74	74	75	74	70	66	
59-850-45x	**FEM 45x**	**cover**	54	58	64	64	65	64	60	56	
		inlet	65	69	75	75	76	75	71	67	

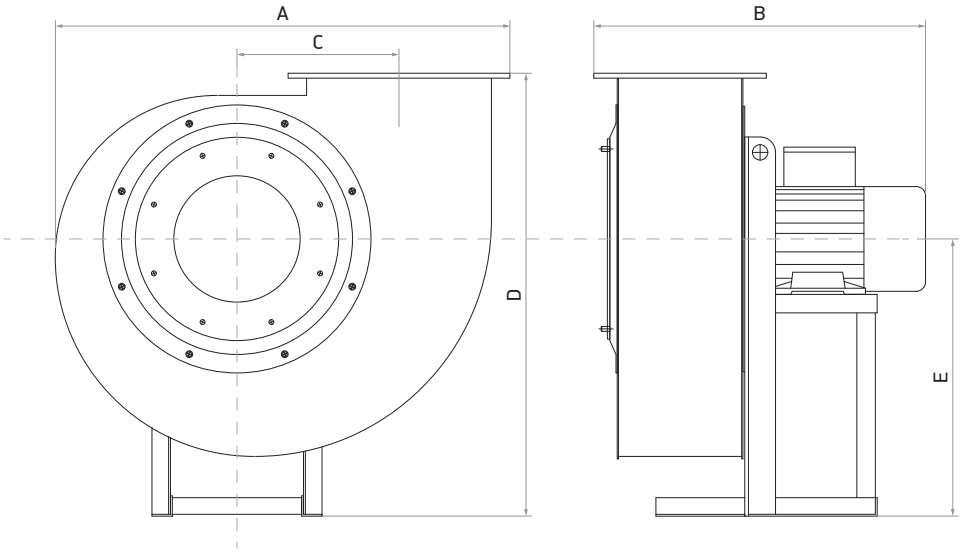

	FEM 400 FEM 450	FEM 451	FEM 452
A	915	848	900
B	597	800	700
C	328	250	332
D	895	772	895
E	560	467	560

NORFI Polska sp. z o.o.

ul. Partyzantów 11
41-200 Sosnowiec, Poland

phone: +48 32 263 33 88
fax: +48 32 263 33 88

internet: www.norfi.pl
e-mail: info@norfi.pl

portfolio: www.portfolio.norfi.pl
social media: www.fb.com/norfipolska

Accessories - ordered separately

Fan spigot outlet

- mounting screws included
- made of steel

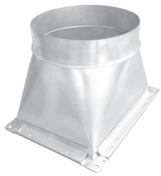

Cat. no.:	FEM:	Diameter:	Weight:
58-4840-401	400, 450	355 mm	4,0 kg
58-4840-400	400, 450	400 mm	4,1 kg
58-4840-450	400, 450	400 mm	4,2 kg
58-4840-501	400, 450	450 mm	4,2 kg

Fan spigot inlet

- mounting screws included
- made of steel

Cat. no.:	FEM:	Diameter:	Weight:
58-4830-401	400, 450	355 mm	⊠
58-4830-400	400, 450	400 mm	1,3 kg
58-4830-450	400, 450	450 mm	2,1 kg
58-4830-501	400, 450	500 mm	⊠

Vibration absorbers

- to avoid vibration transfer from fan to building structure
- including 4 vibration absorbers
- weight 0,2 kg

Cat. no.:	Dimensions:	Thread:
59-4864-016	30 x 20 mm	M8
59-4864-017	50 x 30 mm	M10

Fan bracket kit

Cat. no.:	Length:	Weight:
80-4138-060	600 mm	11,0 kg
80-4138-080	800 mm	13,6 kg
80-4138-100	1000 mm	15,6 kg
80-4138-120	1200 mm	⊠
80-4138-150	1500 mm	29,5 kg
80-4138-180	1800 mm	⊠
80-4138-200	2000 mm	⊠

Anti vibration sleeve

- made of neoprene
- length 200 mm
- including 2 hose clips

Cat. no.:	Diameter:	Operating temp.:
59-4863-355 / 356	355 mm	+180°C / +300°C
59-4863-400 / 401	400 mm	+180°C / +300°C
59-4863-450 / 451	450 mm	+180°C / +300°C
59-4863-500 / 501	500 mm	+180°C / +300°C

Repair switch

- to turn off the fan for maintenance purpose
- voltage 400 V
- current up to 25,0 A
- protection degree IP 65

Cat. no.:
73-031-007

Fan soft starter control

- connection facility for up to 6 remote switches
- LED power and fault indication
- internal transformer with 24V secondary for control circuits
- dimensions 380 x 600 x 210 mm

Cat. no.:	Power:	Weight:
70-4010-005	up to 5,5 kW	21,5 kg
70-4010-007	up to 7,5 kW	21,5 kg
70-4010-011	up to 11,0 kW	21,5 kg

Fan starter star delta

- connection facility for up to 6 remote switches
- LED power and fault indication
- internal transformer with 24V secondary for control circuits
- dimensions 380 x 600 x 210 mm

Cat. no.:	Power:	Weight:
70-4010-105	up to 5,5 kW	21,5 kg
70-4010-107	up to 7,5 kW	21,5 kg
70-4010-111	up to 11,0 kW	21,5 kg

Acoustic enclosure box

- for changing weather conditions
- made of steel
- sound absorption up to 12 dB(A)
- weight 179 kg

Cat. no.:	FEM:	Diameter:
57-4841-400	400	400 mm
57-4841-449	450	400 mm
57-4841-450	450	450 mm

Acoustic enclosure box

- for working indoors
- made of steel
- sound absorption up to 12 dB(A)
- weight 179 kg

Cat. no.:	FEM:	Diameter:
57-4840-400	400	400 mm
57-4840-449	450	400 mm
57-4840-450	450	450 mm